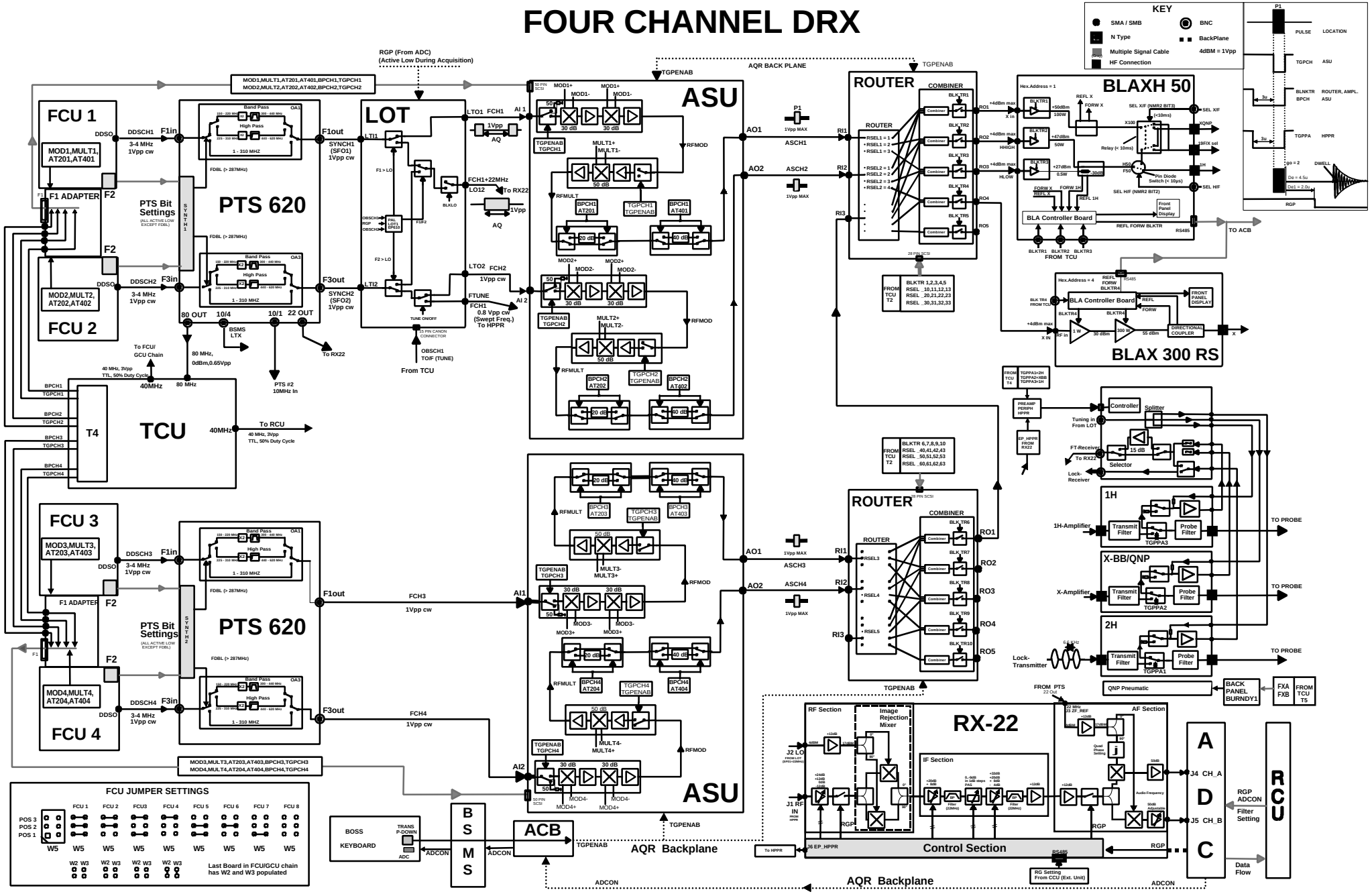FOUR CHANNEL DRX